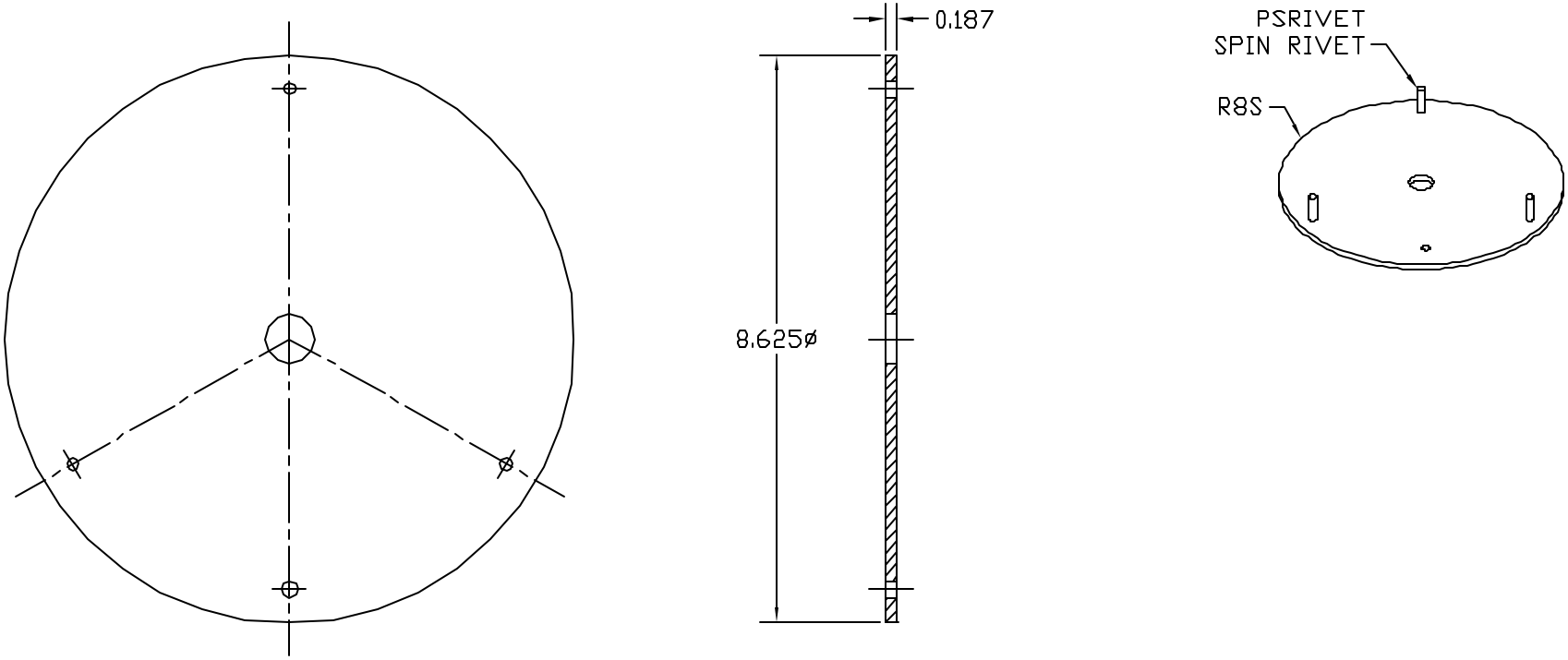

ZINC PLATE/ULTRASEAL AFTER RIVETING

THIS DOCUMENT AND THE CONTENTS THEREOF IS THE PROPERTY OF HARGER INC., AND IS FURNISHED TO YOU FOR INFORMATION ONLY. THE INFORMATION CONTAINED HEREIN IS CONFIDENTIAL AND OF A PROPRIETARY NATURE AND MUST NOT BE DISCLOSED TO THIRD PARTIES WITHOUT THE EXPRESS WRITTEN APPROVAL OF HARGER INC.

LET	REVISION	DATE	BY
C	ADDED HOLE CL DIM	042503	WSM
B	ADDED HOLE DIM	042503	WSM
A	CHANGED TO SPIN RIVET	051100	LAL

TOLERANCES UNLESS NOTED:
FRACTIONAL +/- 1/64
.00 +/- .010
.000 +/- .005

PART NO. 8PS

STEEL TEST WELL COVER

DRAWN BY: LAL

CHECKED BY:

DATE: 010400

HARGER®

301 ZIEGLER DRIVE
GRAYSLAKE, IL 60030
(847) 548-8700

REVISION: C

SCALE: 3/8

SHEET: 1 OF 1