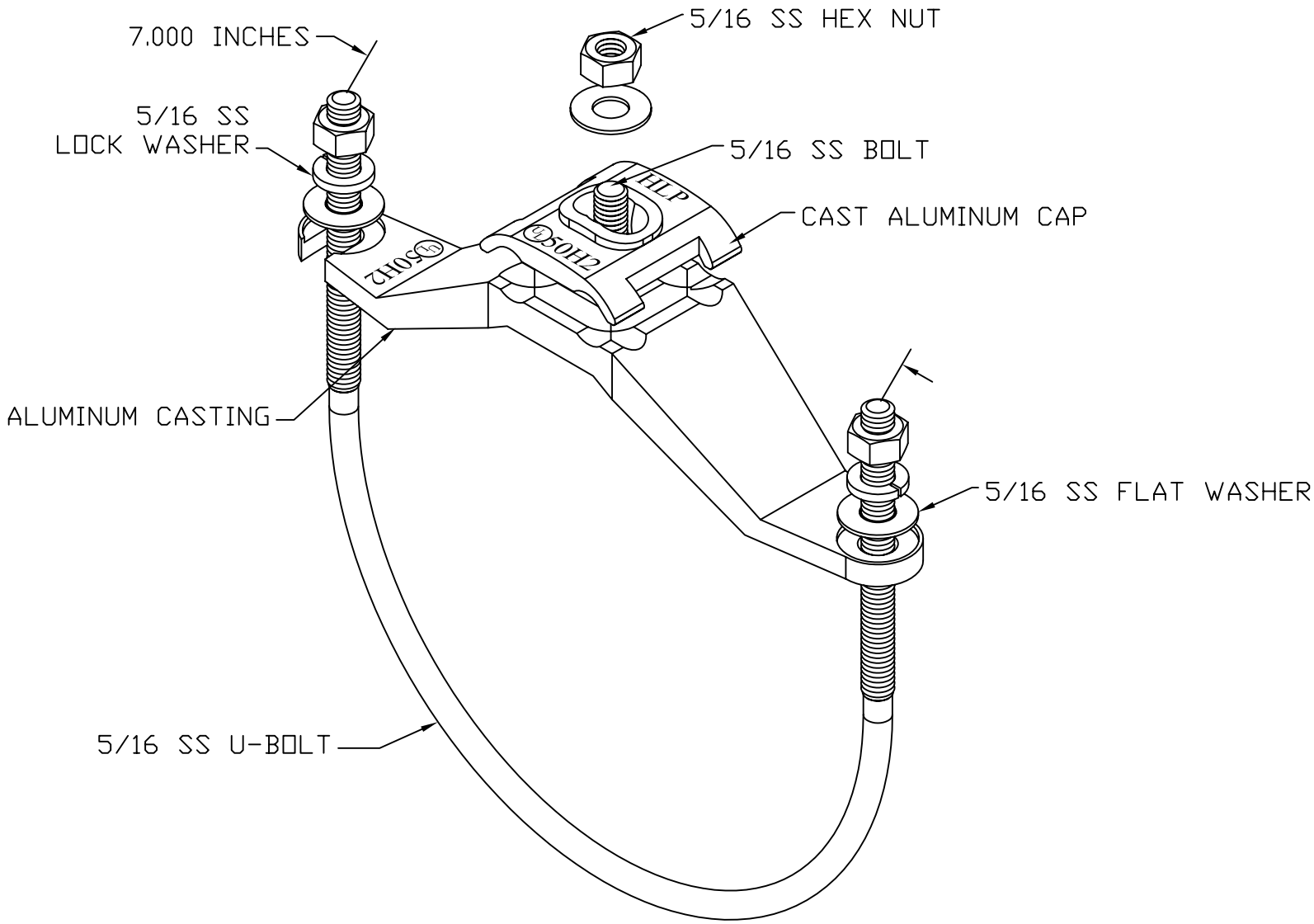

ALUMINUM 5-6" TINNED BRONZE PIPE CLAMP

EST WEIGHT 0.9 LBS

APPROVED

☐ AS DRAWN: _____

☐ AS NOTED: _____

DATE: _____

THIS DOCUMENT AND THE CONTENTS THEREOF IS THE PROPERTY OF HARGER INC., AND IS FURNISHED TO YOU FOR INFORMATION ONLY. THE INFORMATION CONTAINED HEREIN IS CONFIDENTIAL AND OF A PROPRIETARY NATURE AND MUST NOT BE DISCLOSED TO THIRD PARTIES WITHOUT THE EXPRESS WRITTEN APPROVAL OF HARGER INC.

LET	REVISION	DATE	BY
–	–	–	–
A	WAS CS510S	112807	LAL

TOLERANCES UNLESS NOTED:
FRACTIONAL +/- 1/16
.00 +/- .030
.000 +/- .010

3RD ANGLE PROJECTION

PART NO. APC5/6

ALUMINUM GROUND ROD/PIPE CLAMP

– –

DRAWN BY: WSM

CHECKED BY: –

DATE: 080102

HARGER™
301 ZIEGLER DRIVE
GRAYSLAKE, IL 60030
(847) 548-8700

REVISION: A

SCALE: 2/3

SHEET: 1 OF 1