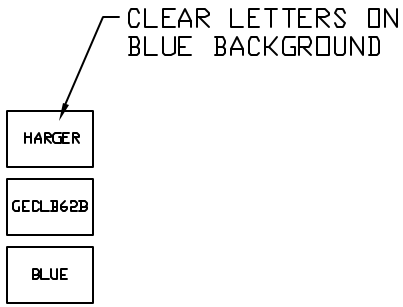

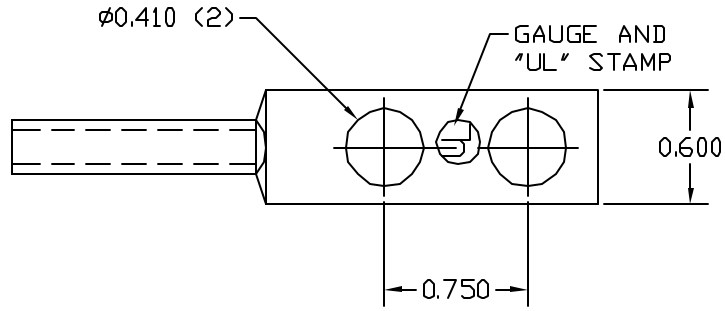

BARREL LABEL, TOP HALF

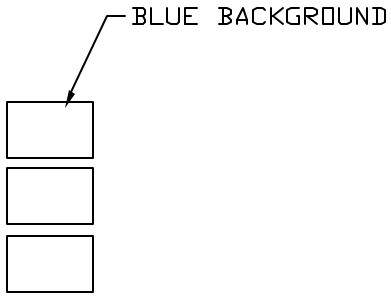

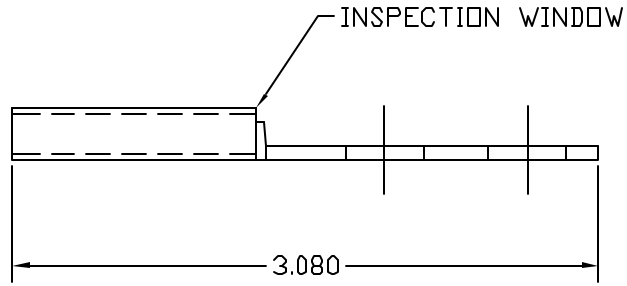

BARREL LABEL, BOTTOM HALF

APPROVED

☐ AS DRAWN: _____

☐ AS NOTED: _____

DATE: _____

LET	REVISION	DATE	BY
A	HOLE TOL WAS .02	100903	WSM

TOLERANCES UNLESS NOTED:
FRACTIONAL +/- 1/64
.00 +/- .010
.000 +/- .005

PART NO. GECLB62B

DRAWN BY: WSM

CHECKED BY:

DATE: 080702

HARGER™

301 ZIEGLER DRIVE
GRAYSLAKE, IL 60030
(847) 548-8700

REVISION: A

SCALE: FULL

SHEET: 1 OF 1