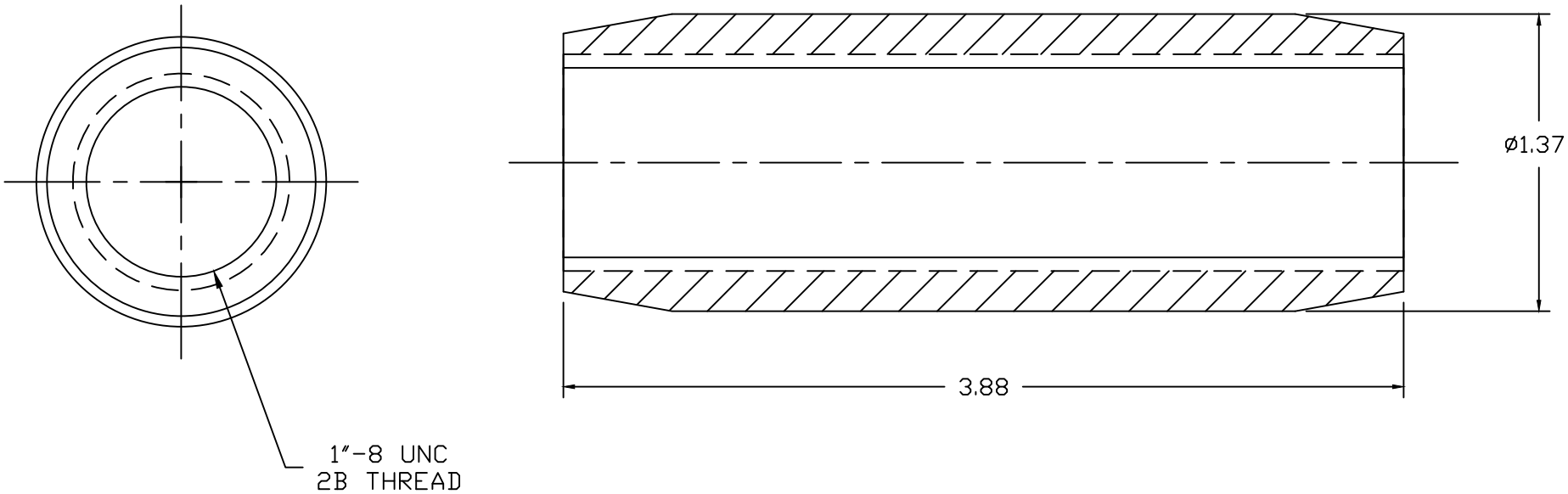

BRASS GROUND ROD COUPLING

EST WT 0.5#

APPROVED

☐ AS DRAWN: _____

☐ AS NOTED: _____

DATE: _____

THIS DOCUMENT AND THE CONTENTS THEREOF IS THE PROPERTY OF HARGER INC., AND IS FURNISHED TO YOU FOR INFORMATION ONLY. THE INFORMATION CONTAINED HEREIN IS CONFIDENTIAL AND OF A PROPRIETARY NATURE AND MUST NOT BE DISCLOSED TO THIRD PARTIES WITHOUT THE EXPRESS WRITTEN APPROVAL OF HARGER INC.

LET	REVISION	DATE	BY
–	–	–	–

TOLERANCES UNLESS NOTED:
FRACTIONAL +/- 1/16
DECIMAL +/- .030
BREAK SHARP EDGES

3RD ANGLE PROJECTION

PART NO. GRC1

GROUND ROD COUPLING

– –

DRAWN BY: LAL

CHECKED BY:

DATE: 081622

HARGER™

301 ZIEGLER DRIVE
GRAYSLAKE, IL 60030
(847) 548-8700

REVISION: –

SCALE: 1.25X

SHEET: 1 OF 1